THE UNIVERSITY OF MELBOURNE

COMP30023 – Computer Systems

Revision of Network Systems

Dr Lachlan Andrew

© University of Melbourne 2025

Outline

Layering

Application: Email (SMTP, IMAP), DNS, HTTP

Transport: Sockets, Multiplexing, UDP, TCP

Network: Addresses, forwarding routing subnets,
IP, BGP, ICMP, DHCP, ARP

Visiting web page mobile.com

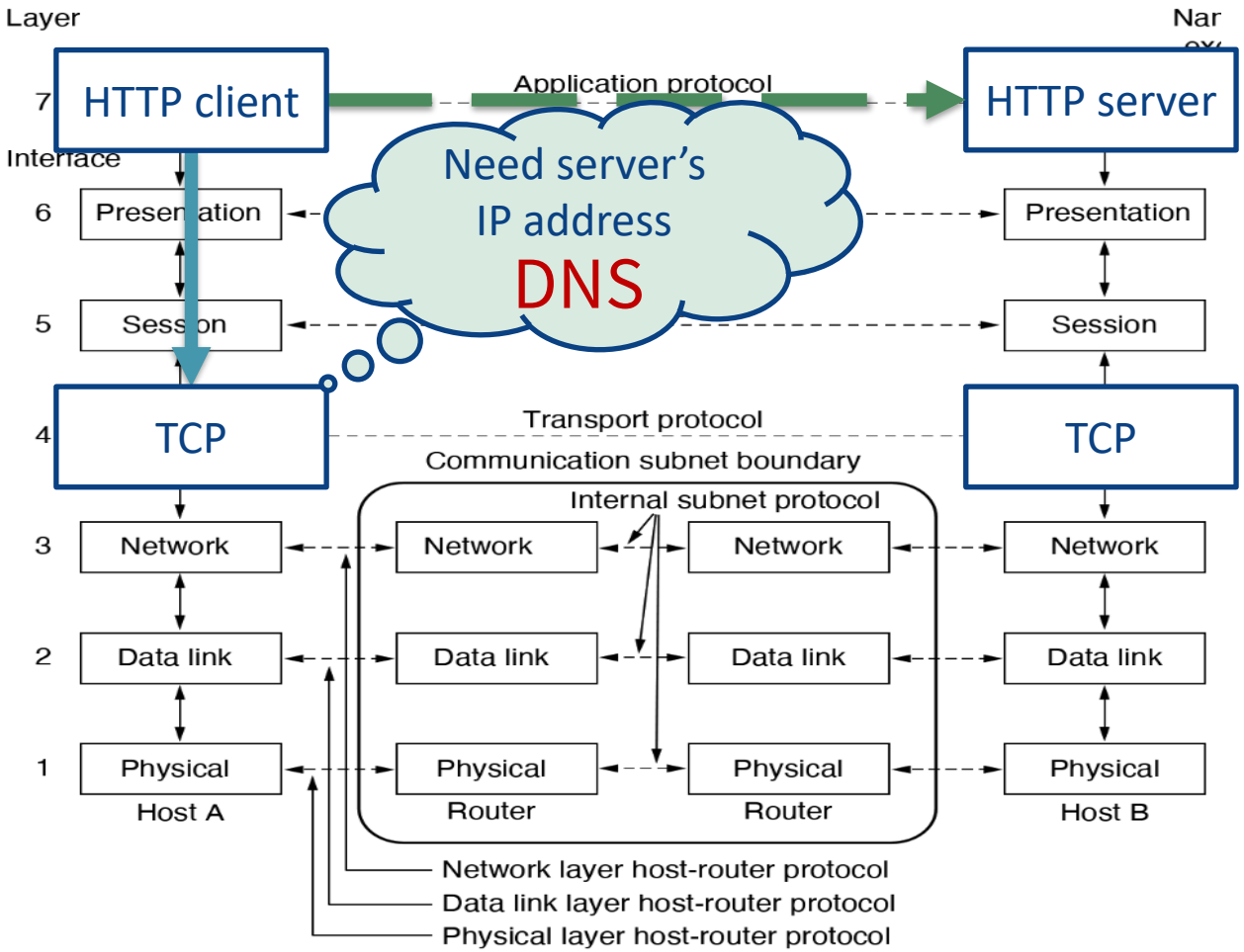

© 2025 University of Melbourne

Visiting web page mobile.com

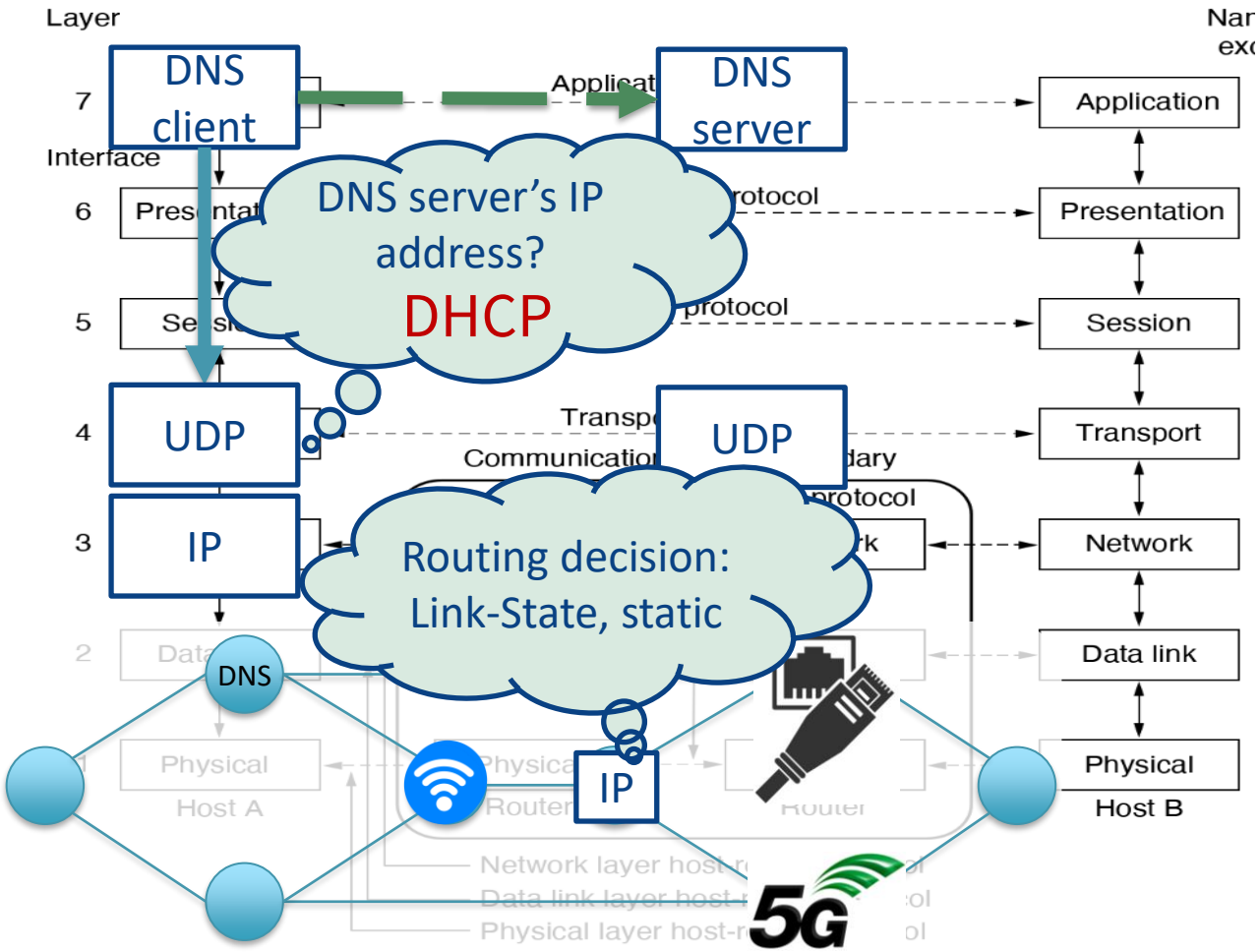

Visiting web page mobile.com

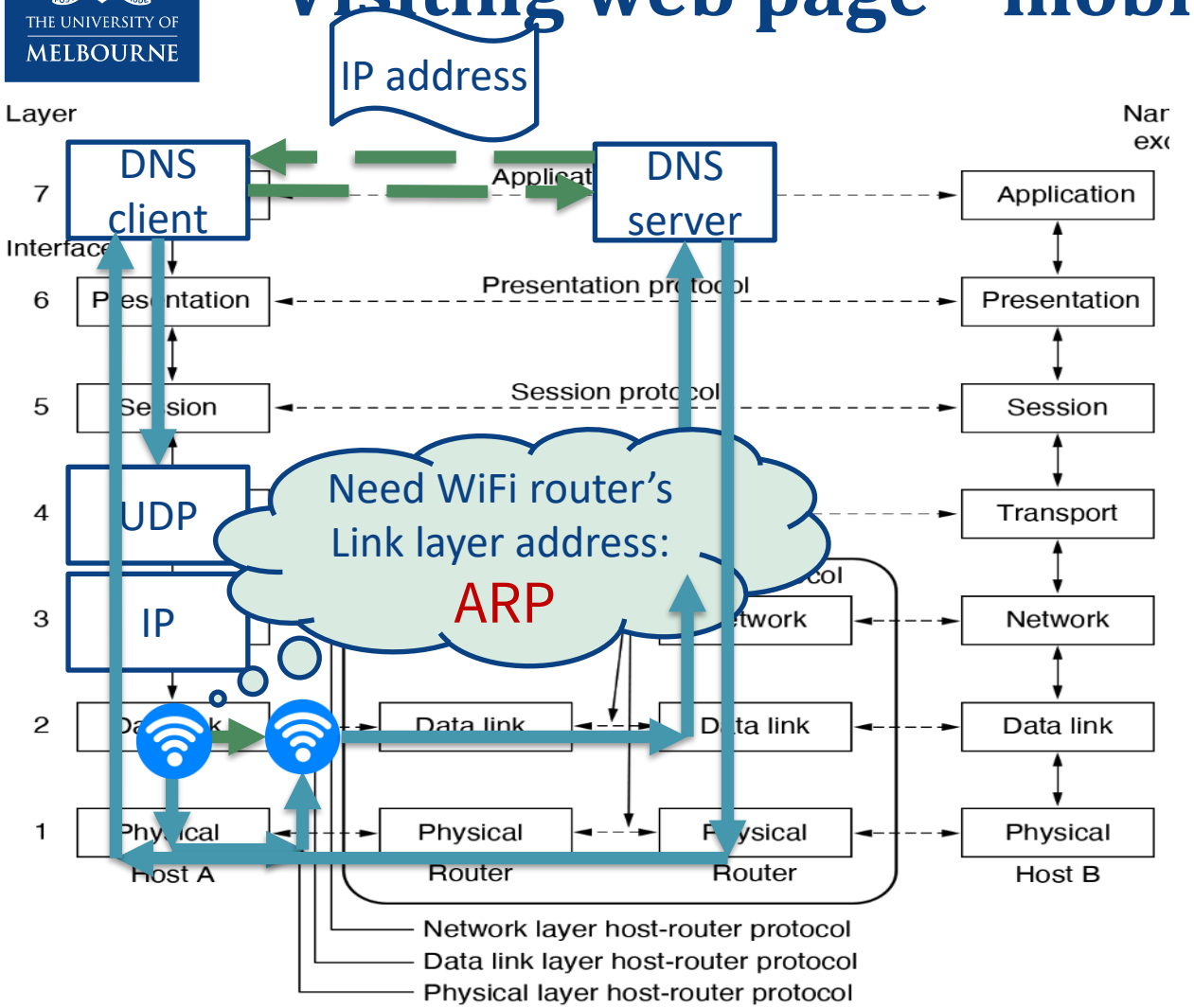

Visiting web page mobile.com

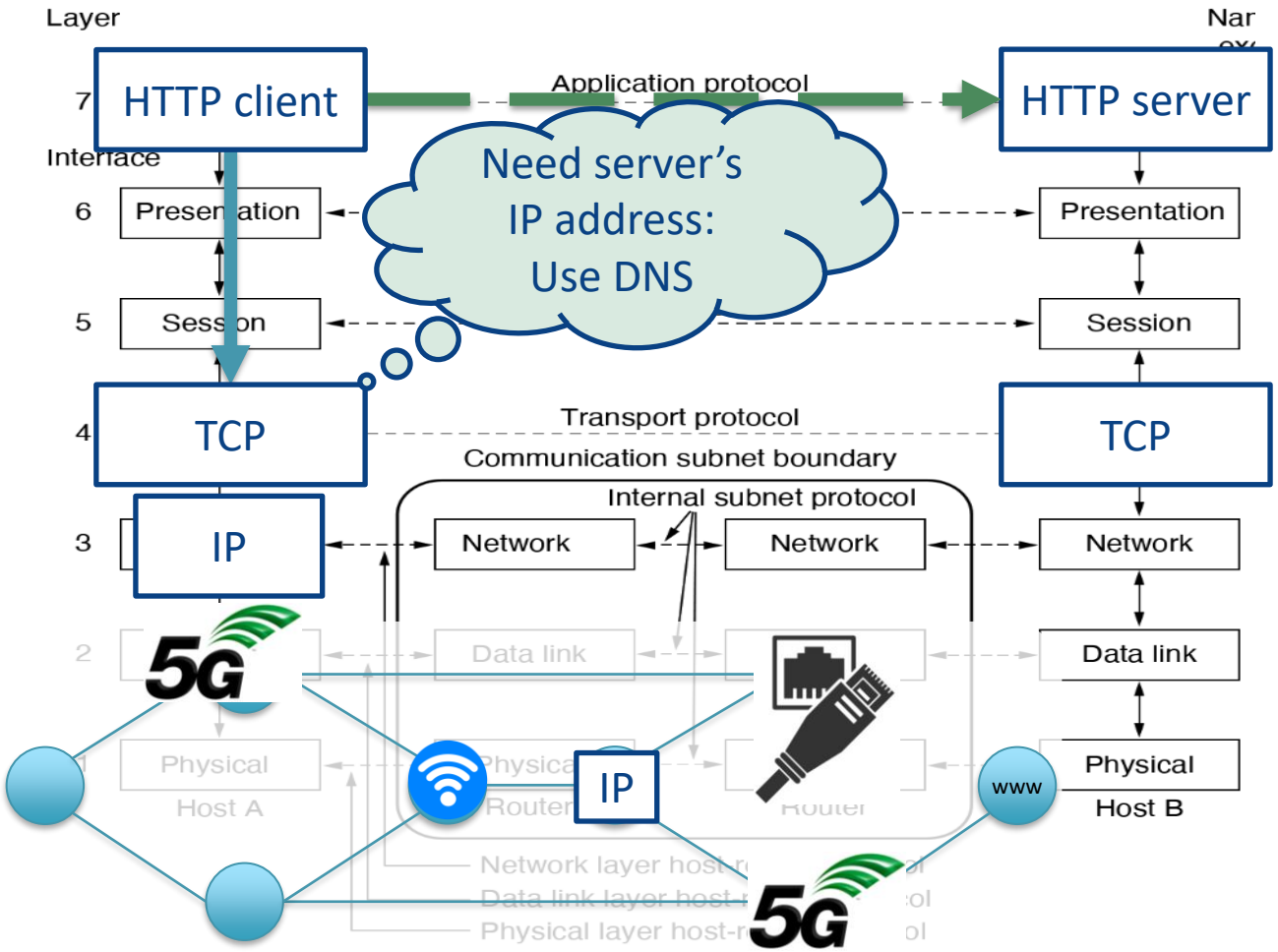

© 2025 University of Melbourne

Visiting web page mobile.com

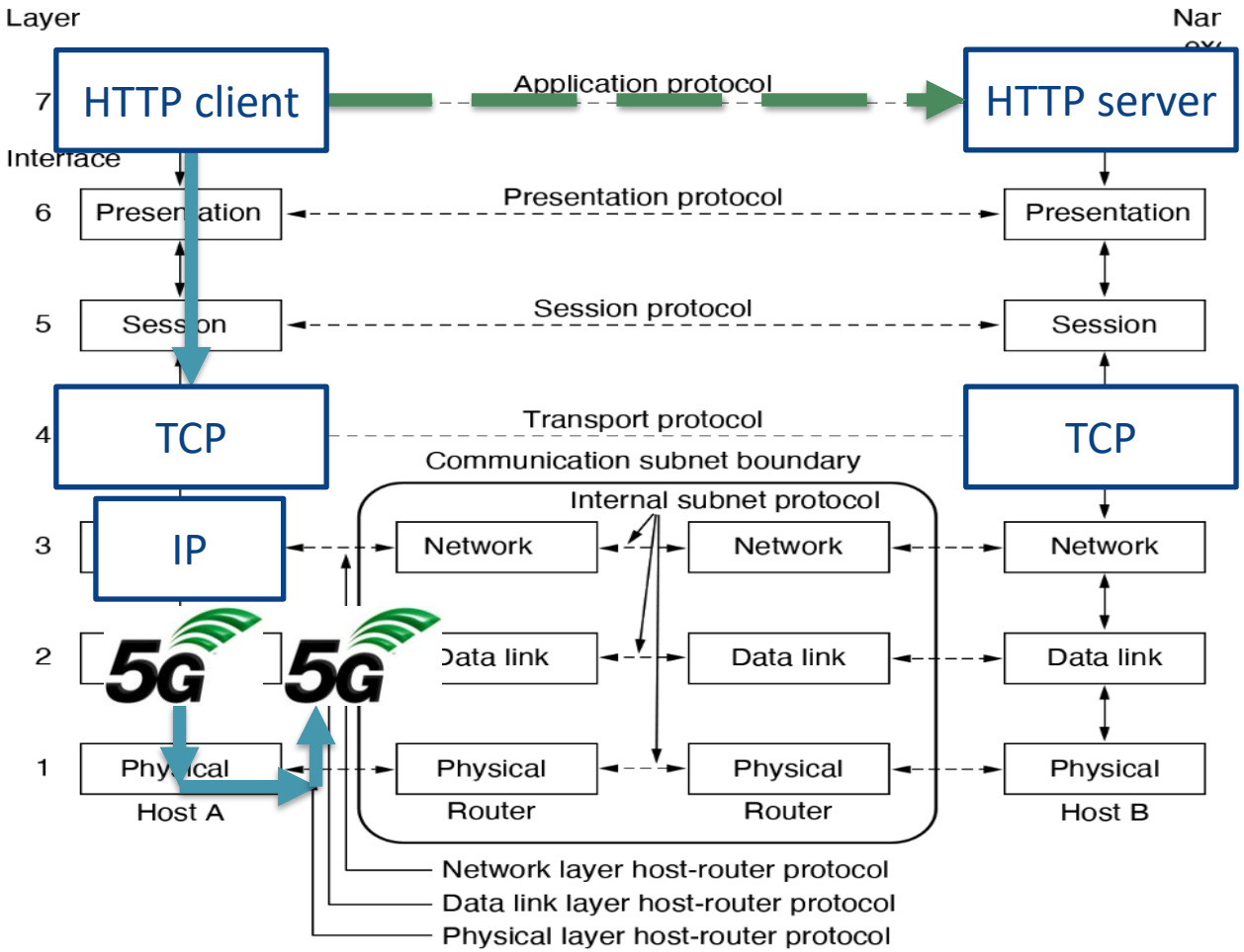

© 2025 University of Melbourne

Visiting web page mobile.com

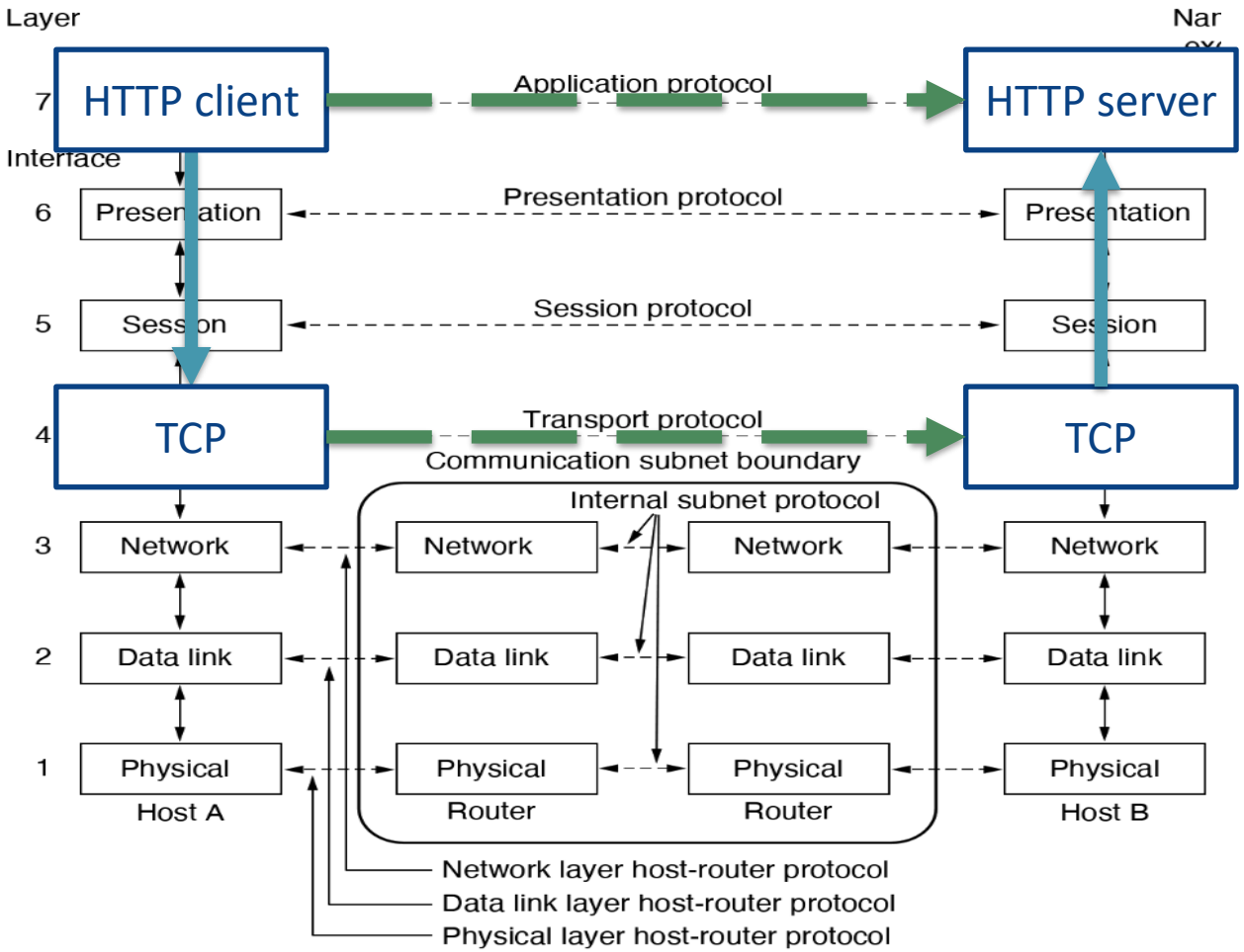

GET index.html HTTP/1.1

3-way handshake

Visiting web page mobile.com

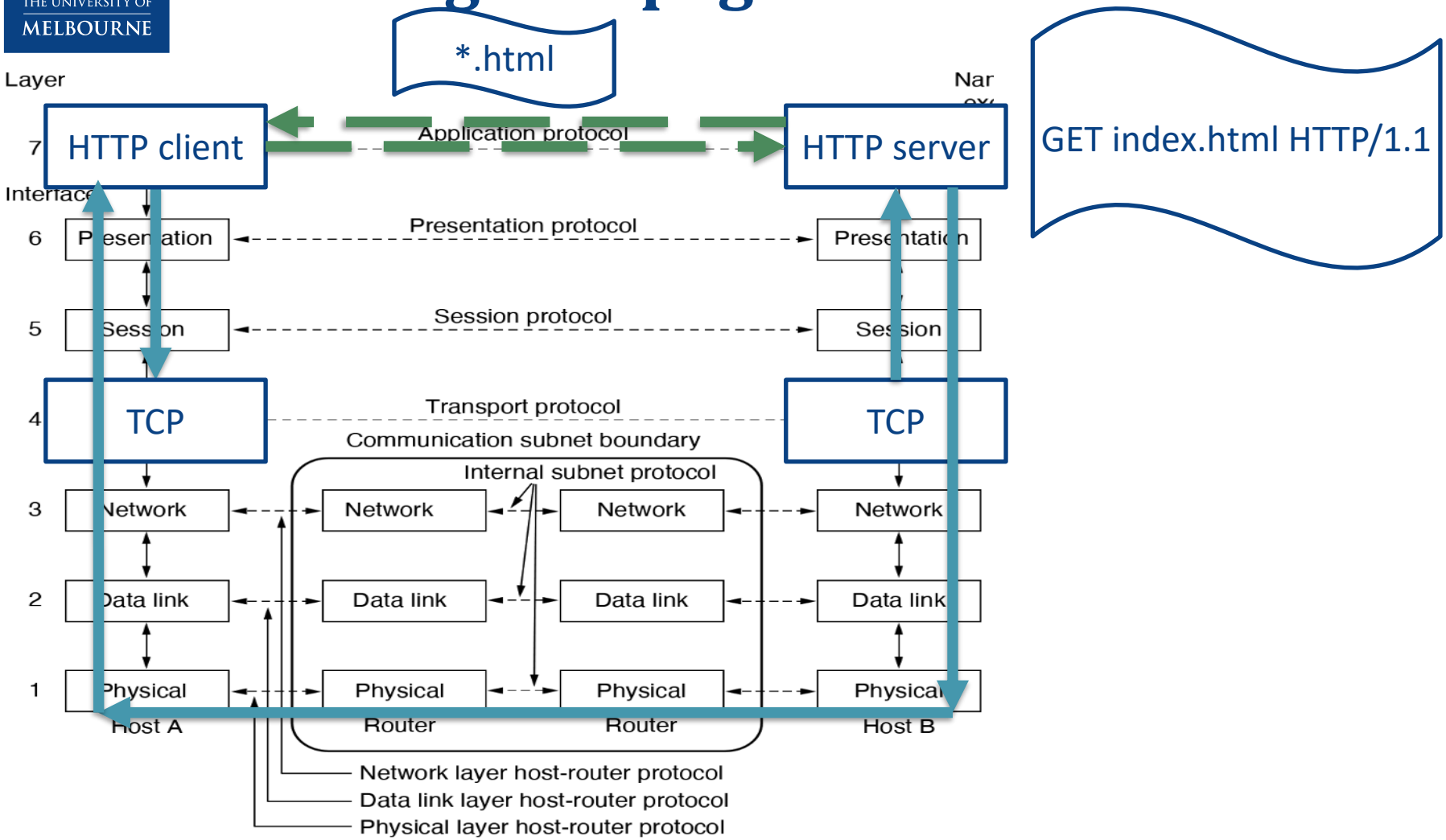

Layering

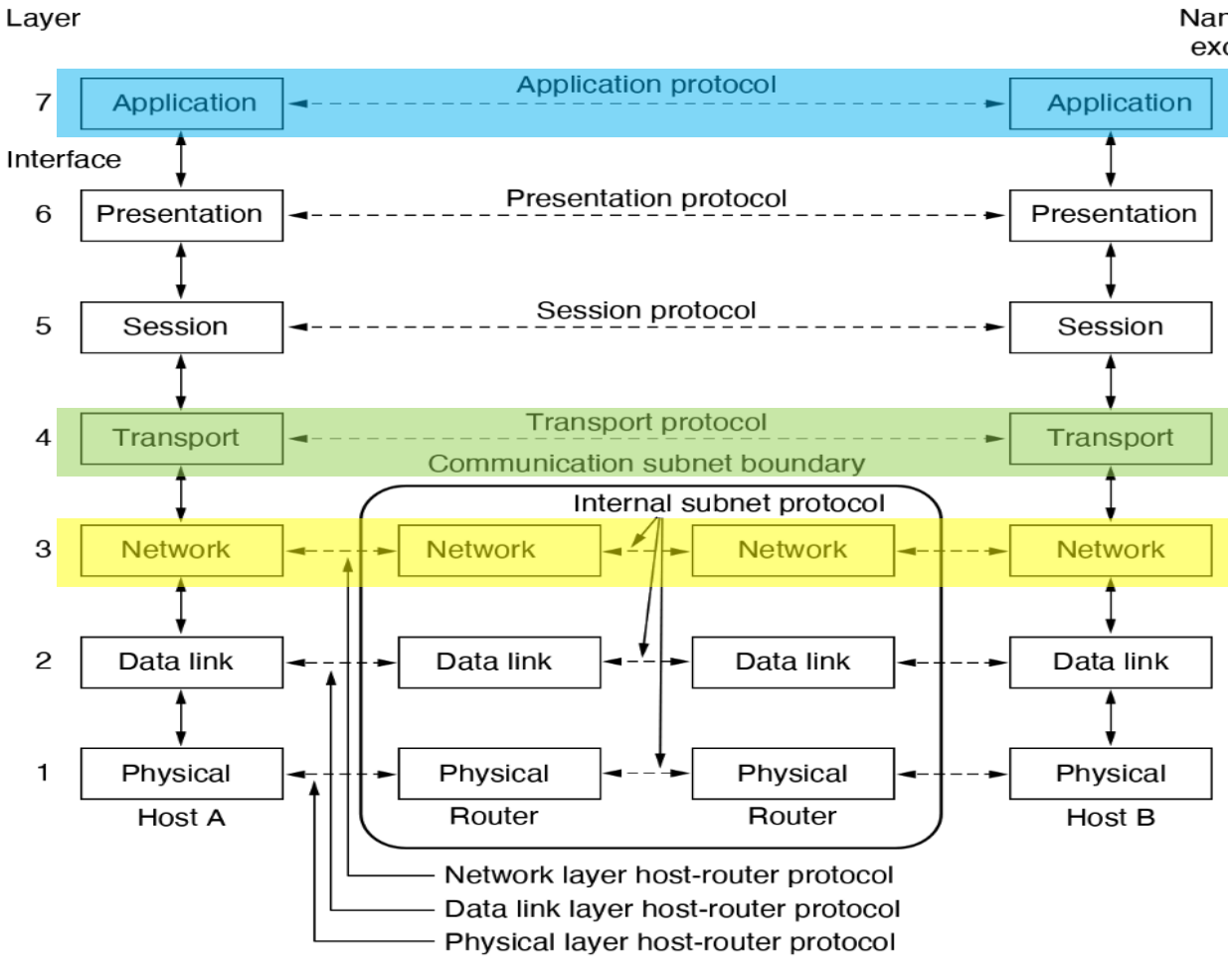

- Use data
- Tidy up e2e
- Get data e2e
- Tidy up p2p
- Get data p2p

Application: Email

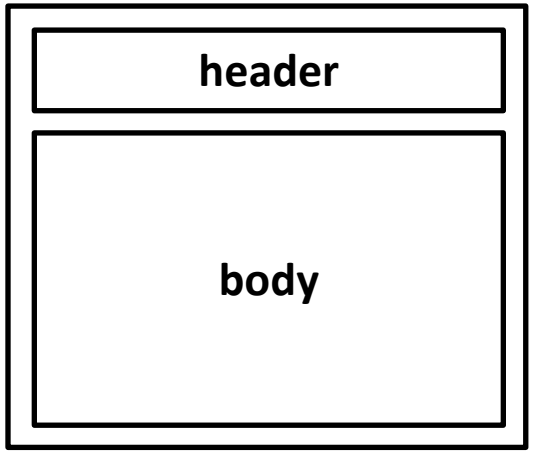

Note: many back-and-forth exchanges.

Slow on modern networks, where latency is larger than serialization delay.

Modern approach of one header has lower delay.

```
S: 220 hamburger.edu
C: HELO crepes.fr
S: 250  Hello crepes.fr, pleased to meet you
C: MAIL FROM: <alice@crepes.fr>
S: 250 alice@crepes.fr... Sender ok
C: RCPT TO: <bob@hamburger.edu>
S: 250 bob@hamburger.edu ... Recipient ok
C: DATA
S: 354 Enter mail, end with "." on a line by itself
C: Do you like ketchup?
C: How about pickles?
C: .
S: 250 Message accepted for delivery
C: QUIT
S: 221 hamburger.edu closing connection
```

Application: DNS

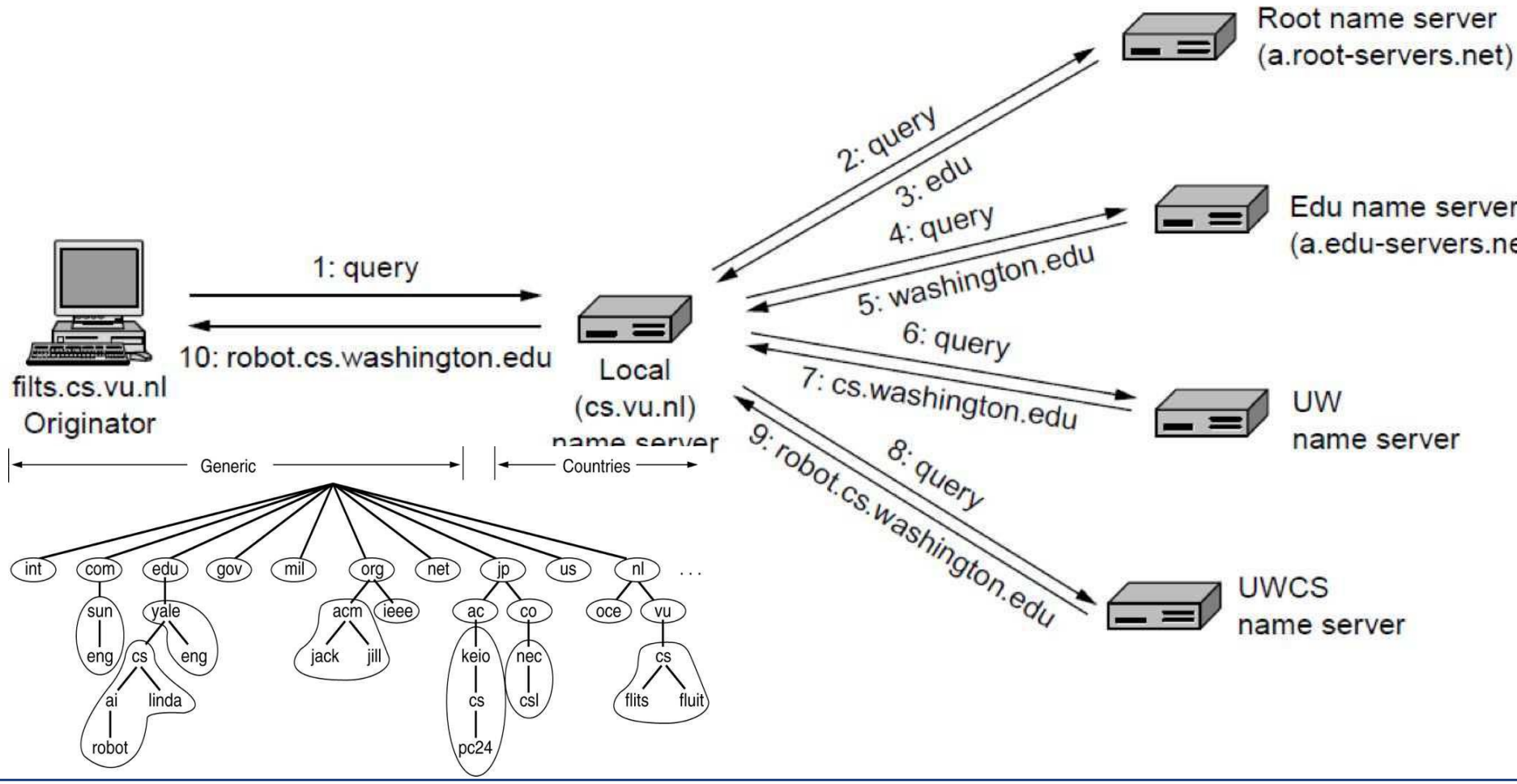

Application: HTTP

`http://user:passwd@example.com:80/dir/file.html?key=value#result`

request line
(GET, POST, HEAD)

header lines

```
GET /dir/file.html?key=value HTTP/1.1
Host: example.com
User-agent: Mozilla/4.0
Connection: close
Accept-language: fr
```

(extra new line)

Blank line
(2 CR/LF) indicates
end of message

Transport: sockets

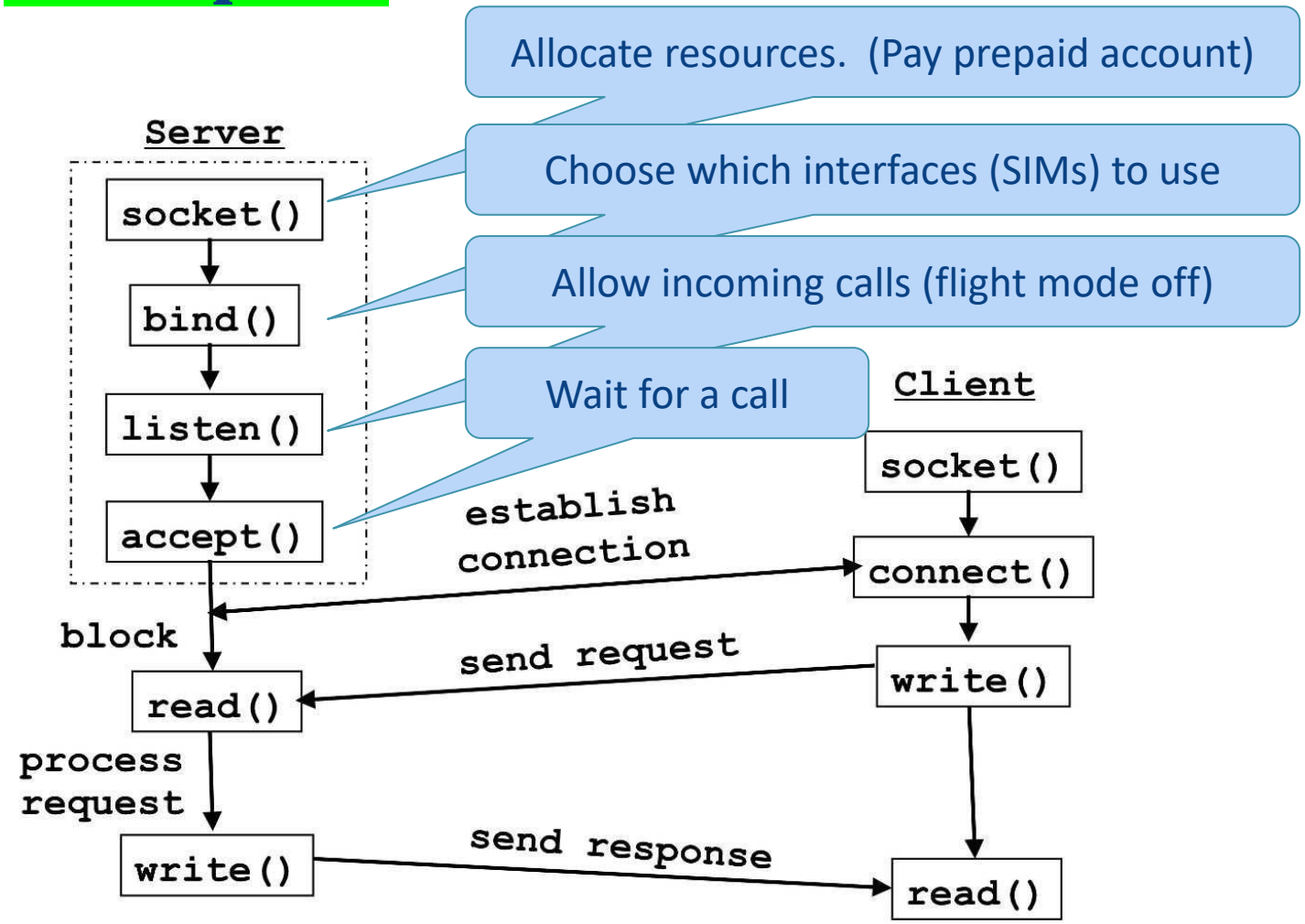

Transport: services

Role: provide services needed by applications, using services available by the network layer.

Application needs:

- Data from one application is not mixed with that for another
- Data doesn't arrive faster than we can handle
- ? Data is streams of bytes
- ? Data arrives reliably (or we know when a packet has been lost)
- ? Data arrives in order

Network provides:

- Get packets from host to host…
  - …most of the time
  - …sometimes multiple copies

Transport: multiplexing and UDP

Connectionless

Unreliable

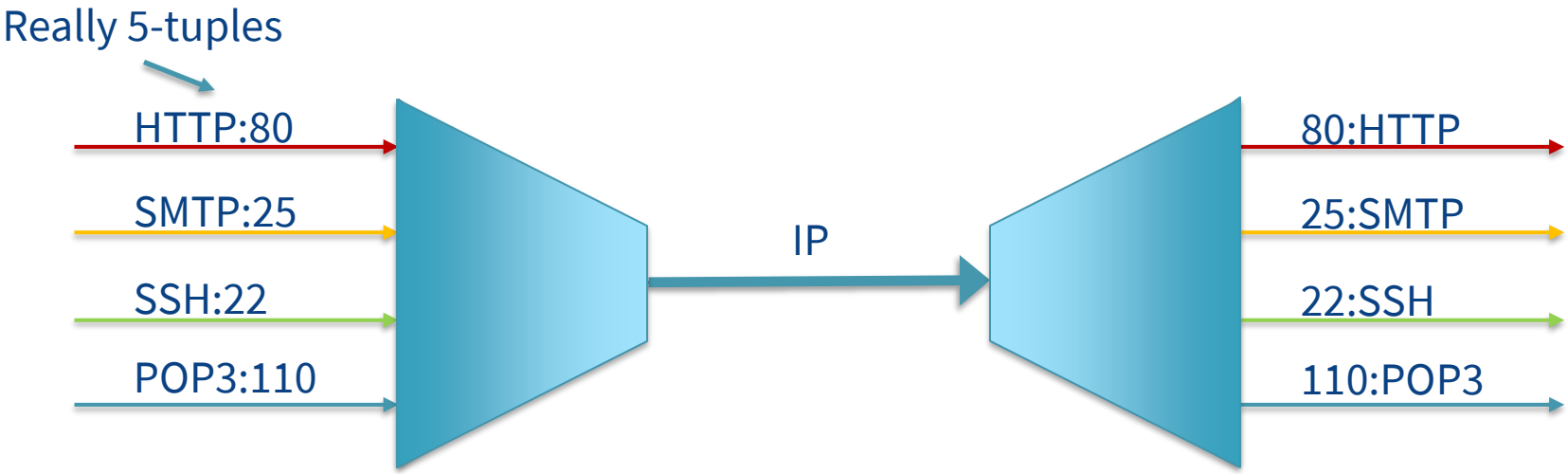

Transport: TCP

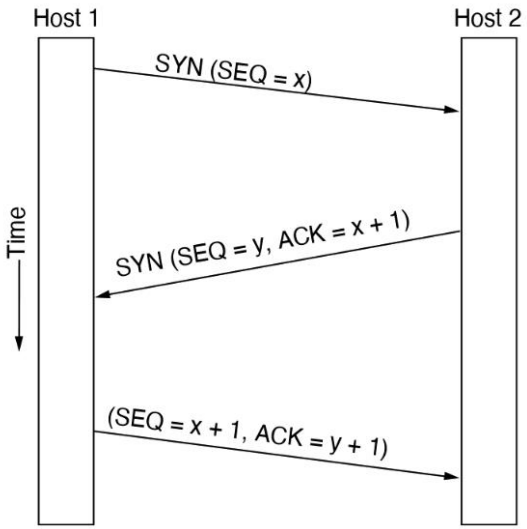

Reliable in-order byte stream

- connection oriented
- 3-way handshake to establish

- write() boundaries don't match read()s

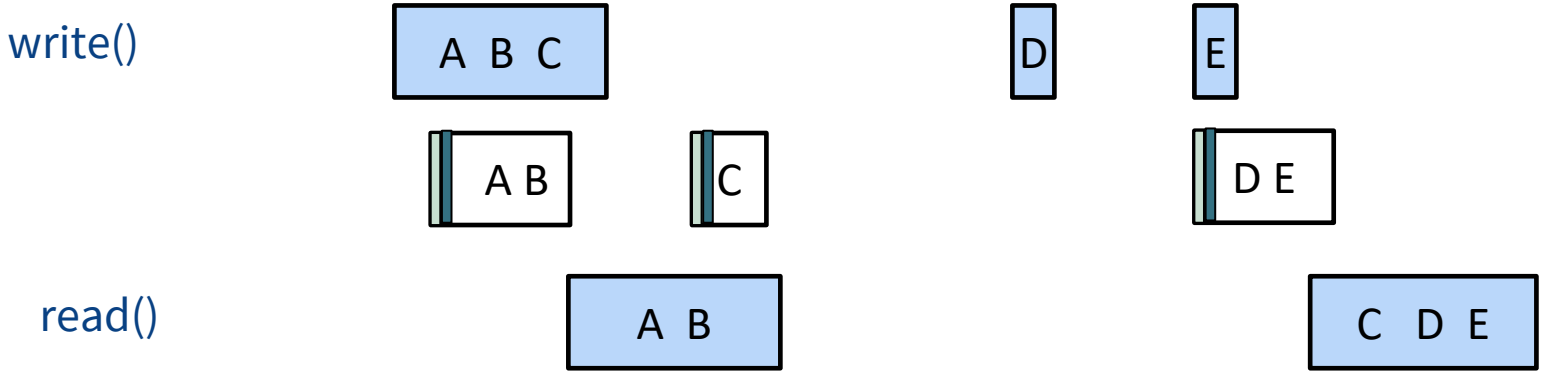

Transport: TCP Sliding Window

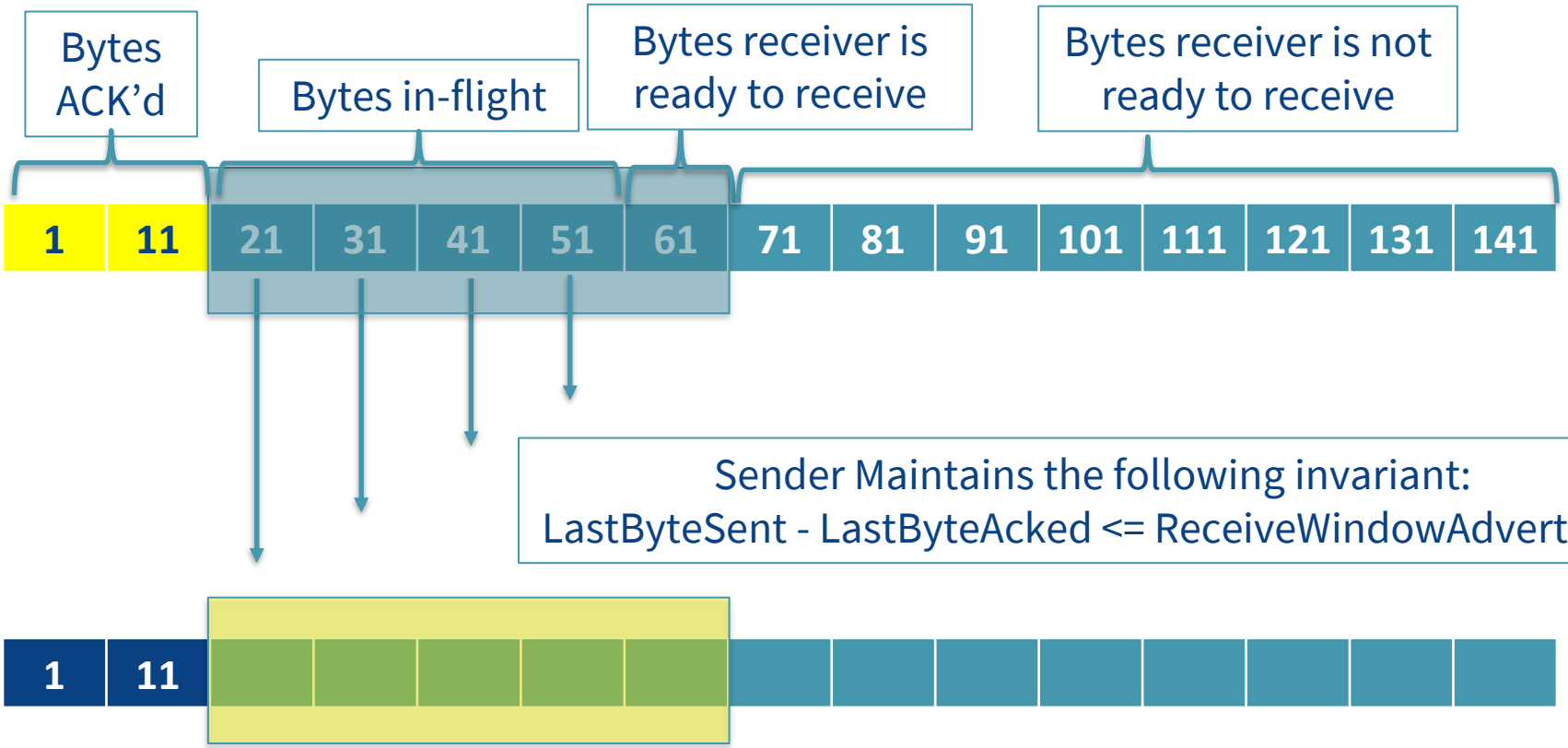

Sender Maintains the following invariant:
LastByteSent - LastByteAcked <= ReceiveWindowAdvertised

© 2025 University of Melbourne

Transport: TCP

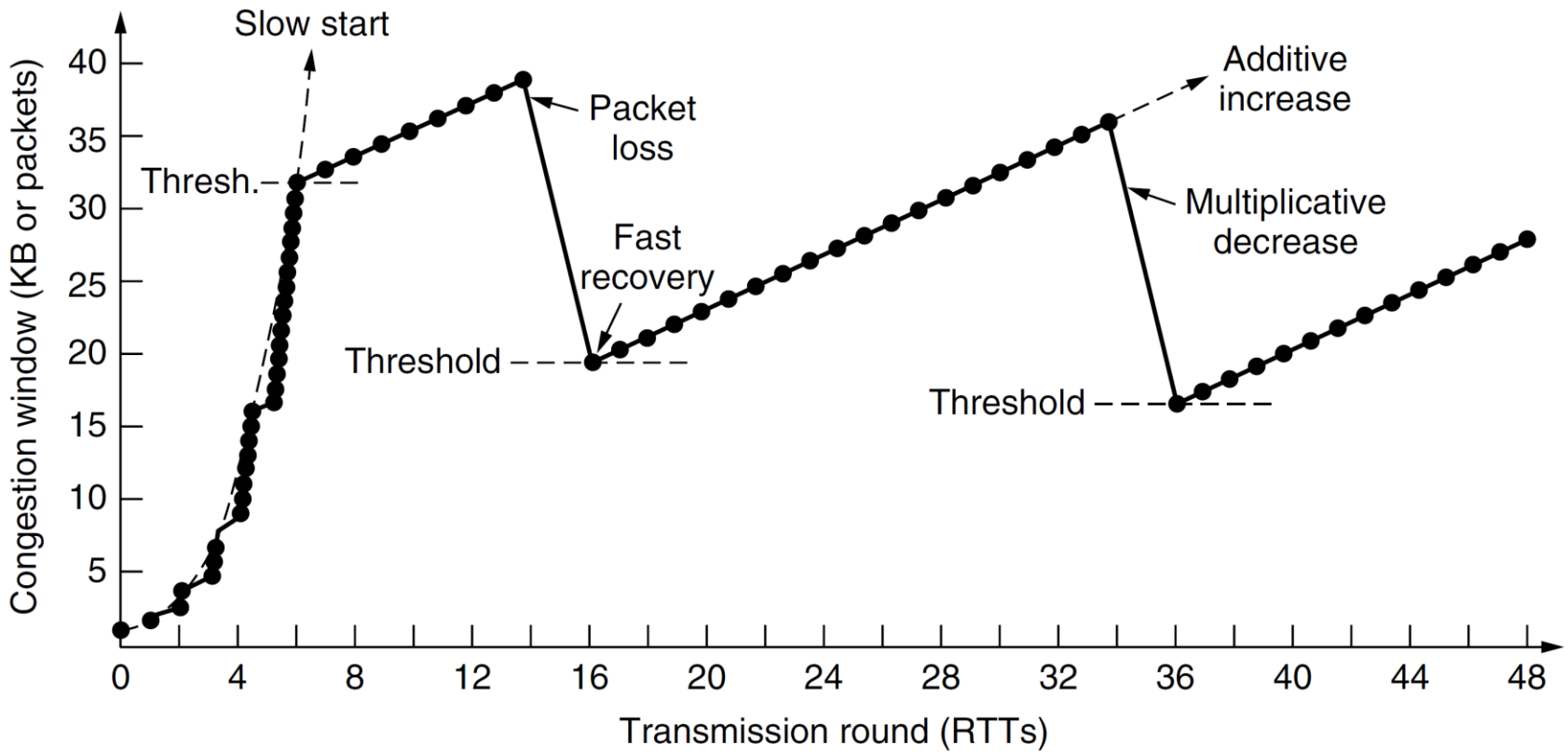

Network: Addresses

- IP - encodes the network and host number
  - Network in top bits
  - Host in bottom bits

10000000.111110101	.1100000000.00000001

10000000.111110101.110000	00000.00000001

- Addresses allocated to *interfaces*

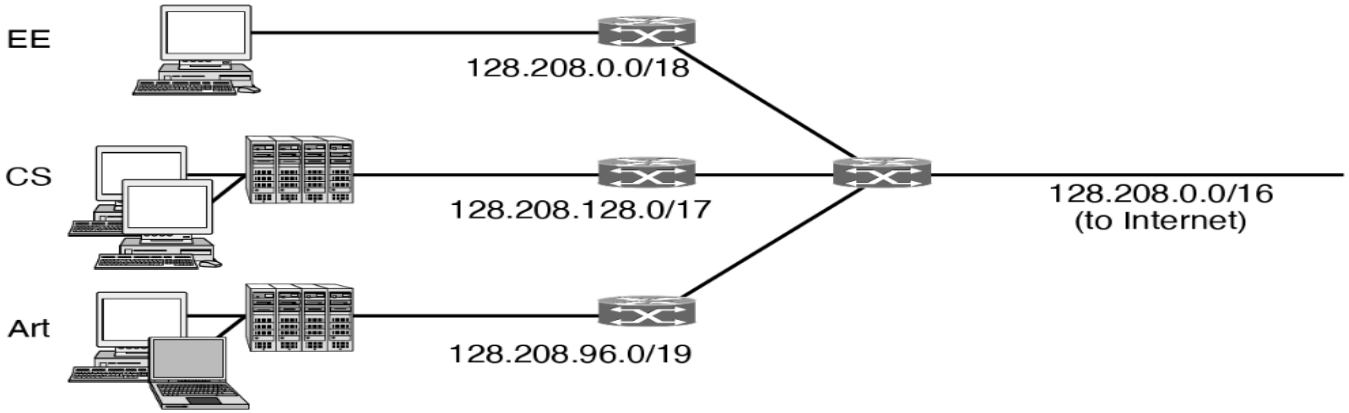

Network: Forwarding

Datagrams

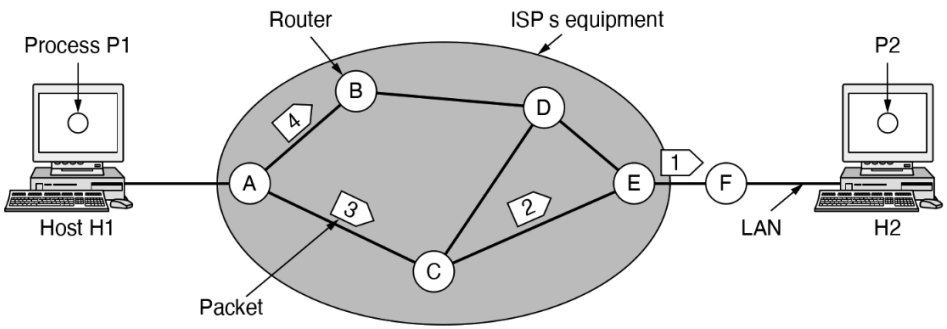

A s table (initially)

Dest.	Line
A	–
B	B
C	C
D	B
E	C
F	C

A s table (later)

A	–
B	B
C	C
D	B
E	B
F	B

C s table

A	A
B	A
C	–
D	E
E	E
F	E

E s table

A	C
B	D
C	C
D	D
E	–
F	F

Virtual circuit

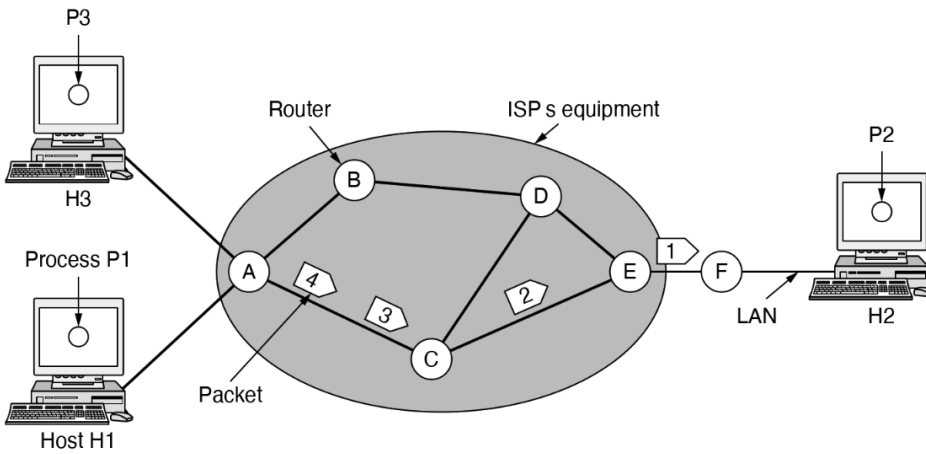

A s table

In		Out	
H1	1	C	1
H3	1	C	2

C s table

A	1	E	1
A	2	E	2

E s table

C	1	F	1
C	2	F	2

Network: routing

- Populating forwarding tables
- Static/Dynamic
- Dijkstra (A* without cost-to-go)
- Bellman's optimality principle
- Link state
  - distribute topology information
  - Shortest path
- Interdomain (BGP): Business policy

Network: control

- Internet Control Message Protocol
  - Ping
  - Traceroute
- Dynamic Host Configuration Protocol (DHCP)
  - Assigns IP addresses and other things
- Address Resolution Protocol (ARP)
  - Finding layer 2 (MAC) address to match IP

© 2025 University of Melbourne